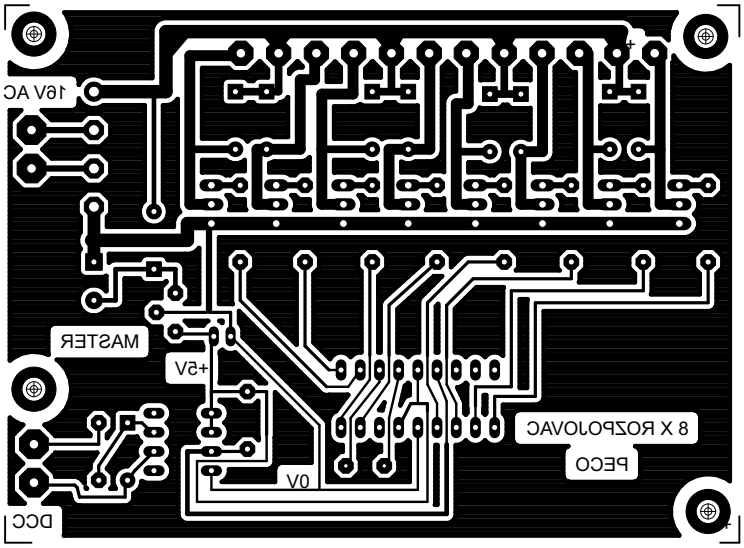

24.10.2009 16:44:34 C:\Program Files\EAGLE-5.1.0\projects\examples\Rozpojovač PECO master.brd